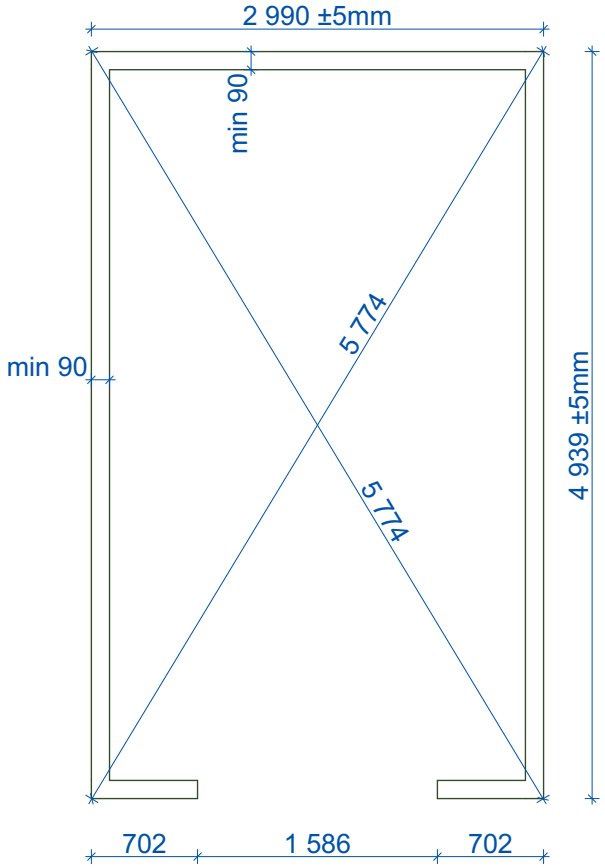
2 990 ±5mm
min 90
min 90
5 774
5 774
4 939 ±5mm
702
1 586
702

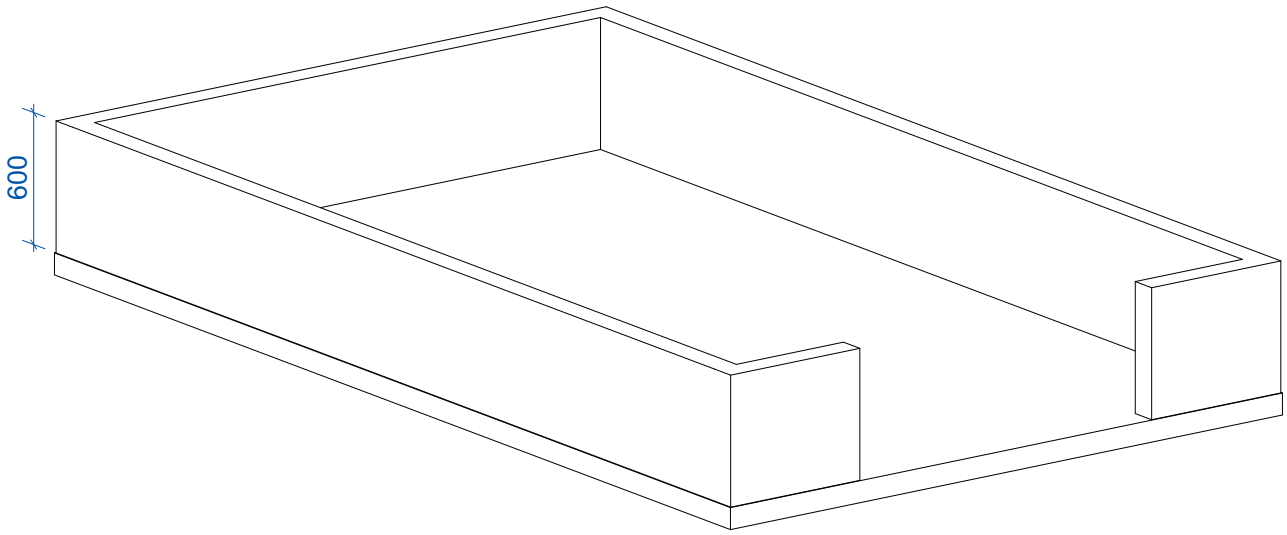
600